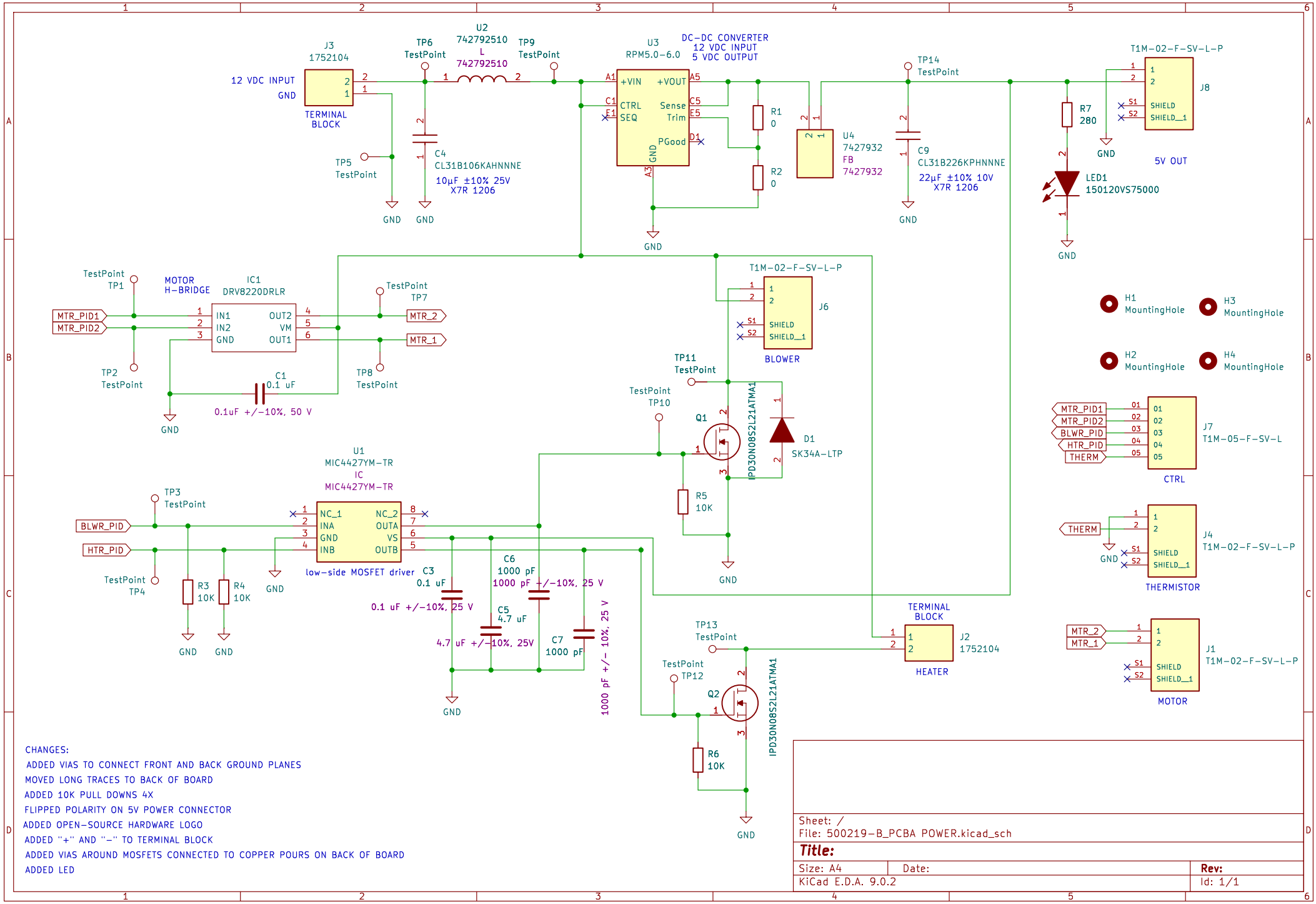

CHANGES:
ADDED VIAS TO CONNECT FRONT AND BACK GROUND PLANES
MOVED LONG TRACES TO BACK OF BOARD
ADDED 10K PULL DOWNS 4X
FLIPPED POLARITY ON 5V POWER CONNECTOR
ADDED OPEN-SOURCE HARDWARE LOGO
ADDED "+" AND "-" TO TERMINAL BLOCK
ADDED VIAS AROUND MOSFETS CONNECTED TO COPPER POURS ON BACK OF BOARD
ADDED LED

Sheet: /
File: 500219-B_PCBA POWER.kicad_sch

Title:

Size: A4	Date:	Rev:
KiCad E.D.A. 9.0.2		Id: 1/1